TELEPHONES LE LAS
Tel:.....(33) 1 48.76.62.62
Fax:.....(33) 1 48.76.83.04
E-mail: .....lelas@lelas.fr
Web-site:.....**www.lelas.fr**

ATEX TELEPHONE Ex II2GD
Handset / keypad / telecommand

TLA 229 A1

Explosion-proof Ex II2GD telephone for wall mounting, indoor or outdoor, for the locale industrial and noisy

Tamb.= -40°C < Ta < +60°C (T5)

TLA 229 A1

Encombrement

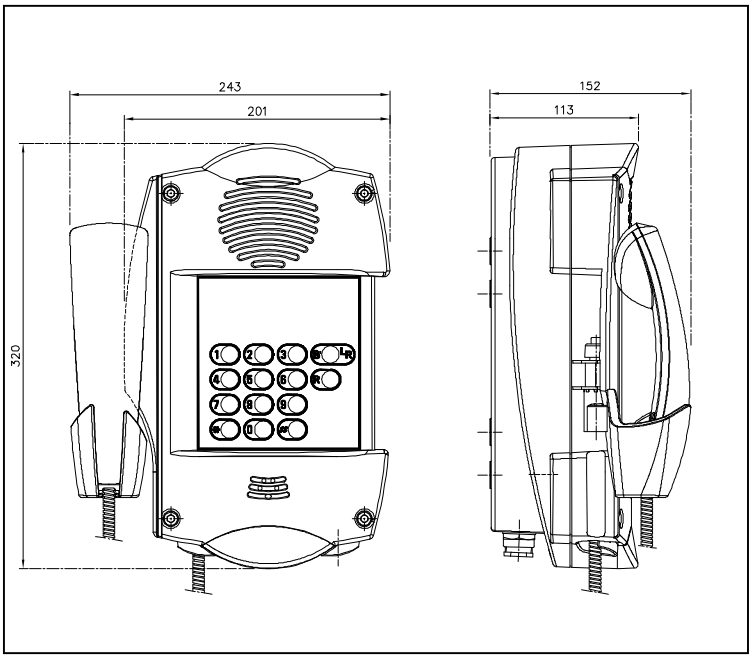

Electrical Characteristics:

Direct current supply:	12 to 48 Vdc
Consumption:	< 40mA±3
Ringing voltage:	35 – 90 Va
Dialling:	DTMF / decimal
Flashing/earth:	adjustable
Electronic Bell:	85dB at 1 m.
Visual calling signal :	On require
Noise cancelling:	noise cancelling
Hook:	magnetic
Conversation Mode:	By handset
Others:	CCITT Q23

Additional functions (options)

- Flashing light (Réf : TLA 229 A1F)
- Telecommand

Body material / Color :.....polycarbonate compound / RAL2003
Handset material / Color :....polycarbonate compound / RAL2003
Handset Cord :.....stainless steel (inox) 100Kg resistance
Microphone : .....
Loudspeaker :.....weatherproof vandal resistant / 5W
Mounting :.....on wall 2 or 4 points
Termination :.....inside screw connections
Cable Type :...multiple or single wire with a max section 1.5mm²
Cable Entry :.....Ex type "e" for cable Ø5 to Ø9mm
Dimension : .....201 X 320 X 113 mm
Weight : .....2,3 kg
IP-rating :.....IP64
Ambiente temperature usage :.....-40°C <Ta< +60°C
Specific marking :.....Ex II2GD (gas and dust)
Complementary marking. :.....Ex e ib mb IIC T5 Gb
Ex ib tb IIIC T100°C Db IP64
EC type Examination Certificate :.....INERIS 09ATEX0074X
IECEx Certificate of conformity:.....IECEx INE 14.0004

Installation, Operation and Maintenance Procedures

The first commissioning must be made by a competent company facility in area a risk

- Open the pivoting front panel removing the three screws.
- Pass the cables through the cable glands being sure that the cable fit with the rubber gasket
- Connect the telephone wires at the screw terminals as indicated in the operator's book
- Make a functional test calling another extension and asking to be re-called
- Adjust the volume of the bell (see operator's book)
- Adjust the sensitivity of the microphone (see operator's book)
- Close the front panel paying attention to the position of the gaskets

TELEPHONES LE LAS reserves the right to alter specifications without notice.